Experiment–6: Common-Emitter Amplifier using Bipolar Transistor

Group no: - 14	Date of Experiment: - 05/10/2023
Roll no: - 22CS02002 20CS02012	Name: - Soham Chakraborty - Kasthuri Hrushikesh

Pre-Lab Work: LTSpice simulation of all 3 parts.

Part-1

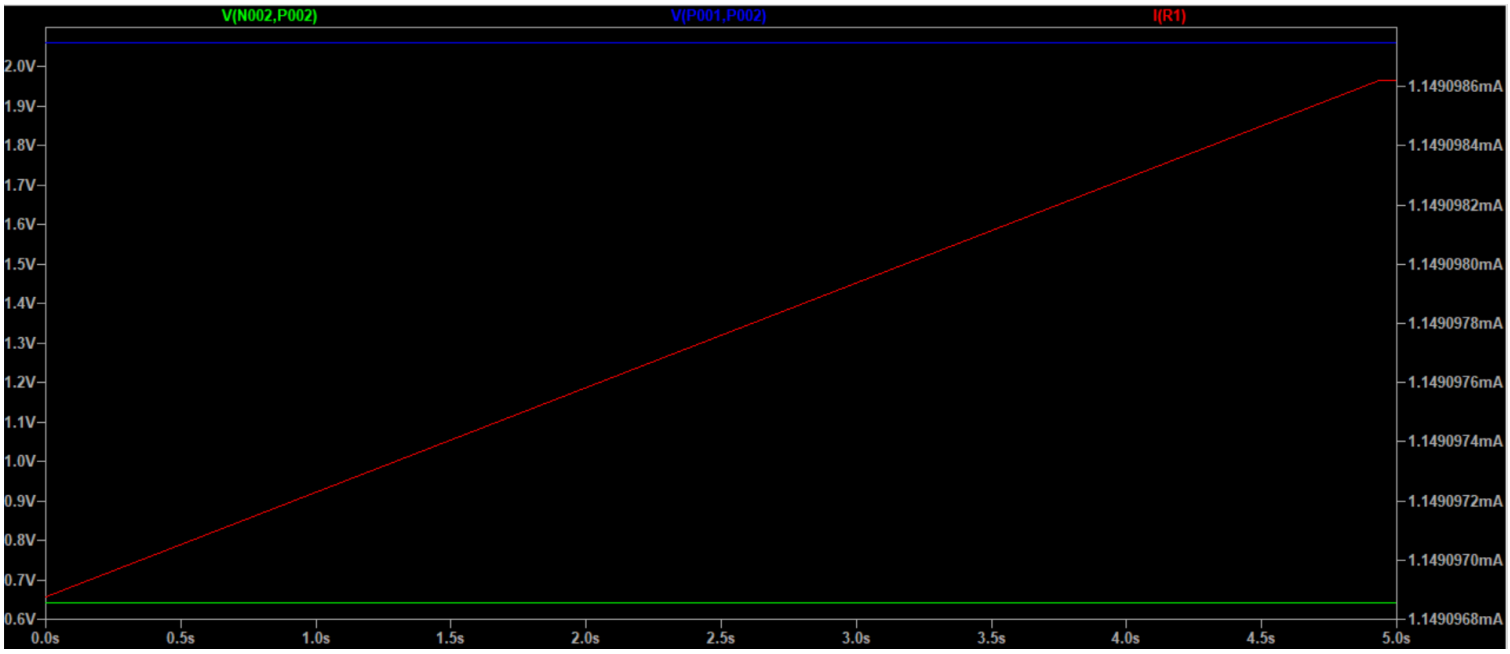

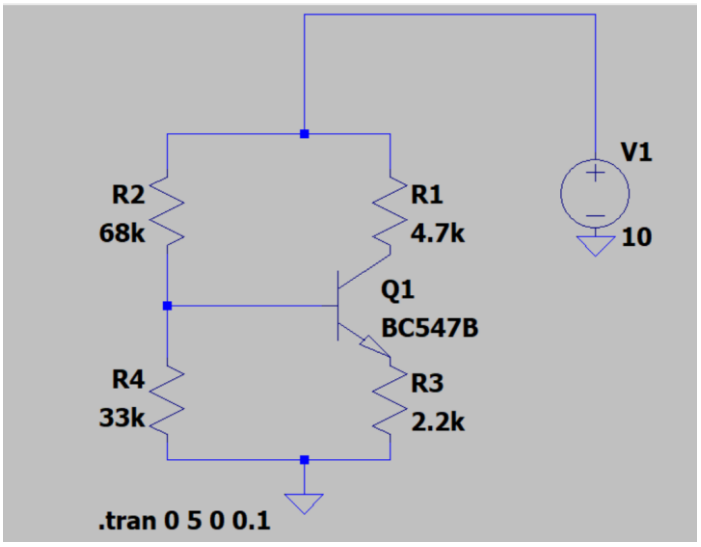

Part- 2

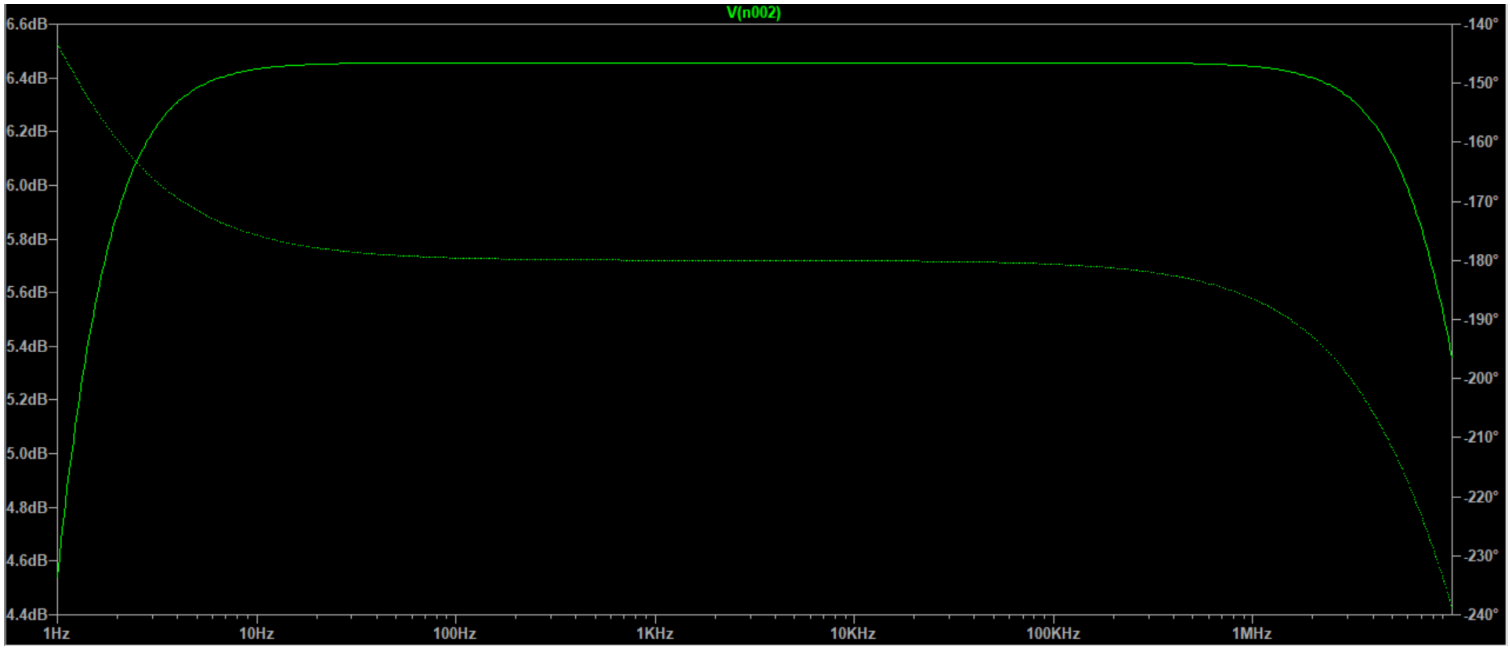
V(n002)
6.6dB
6.4dB
6.2dB
6.0dB
5.8dB
5.6dB
5.4dB
5.2dB
5.0dB
4.8dB
4.6dB
4.4dB
-140°
-150°
-160°
-170°
-180°
-190°
-200°
-210°
-220°
-230°
-240°
1Hz
10Hz
100Hz
1KHz
10KHz
100KHz
1MHz

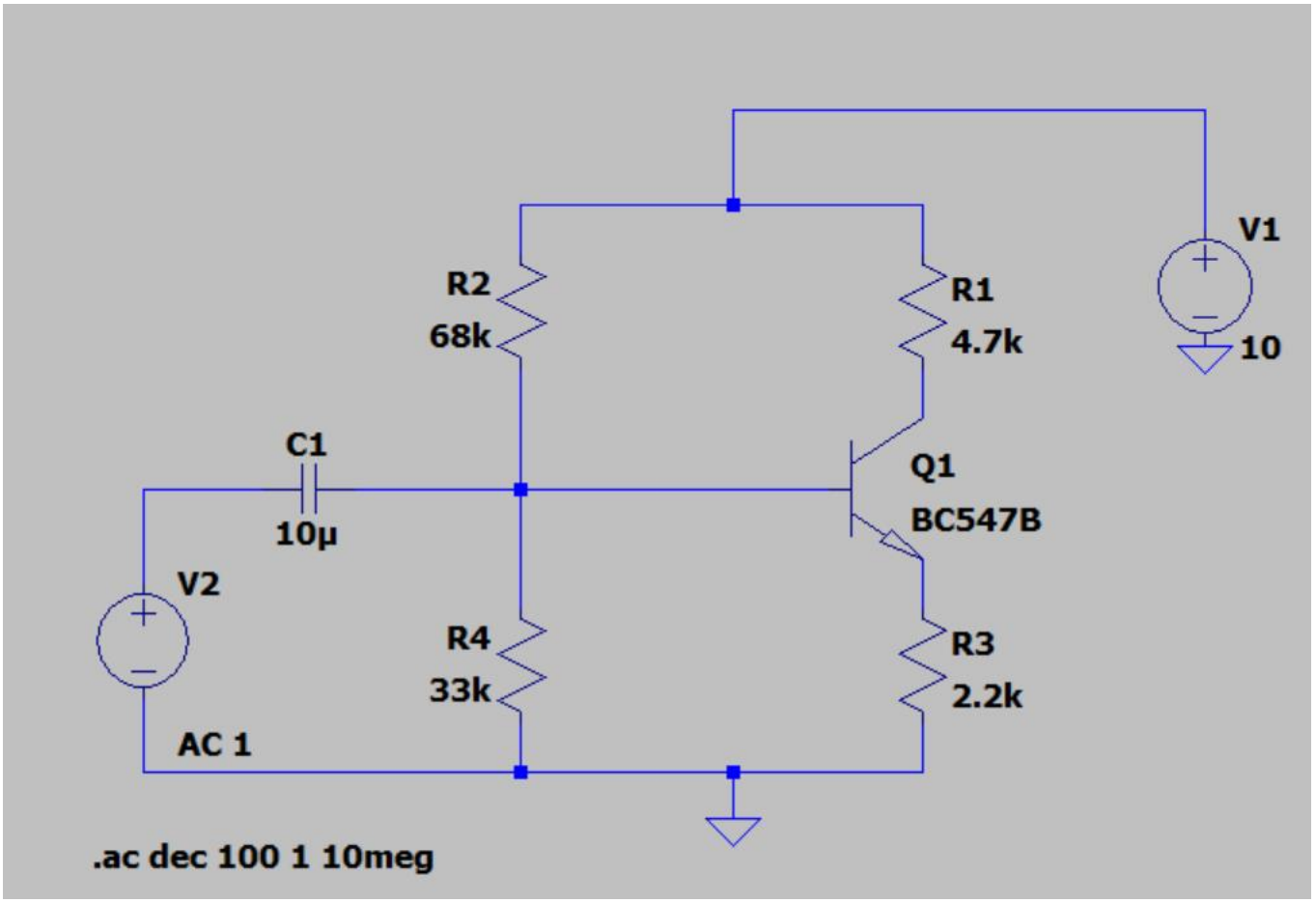
V1
10
R2
68k
R1
4.7k
C1
10µ
Q1
BC547B
V2
R4
33k
R3
2.2k
AC 1
.ac dec 100 1 10meg

Part-3

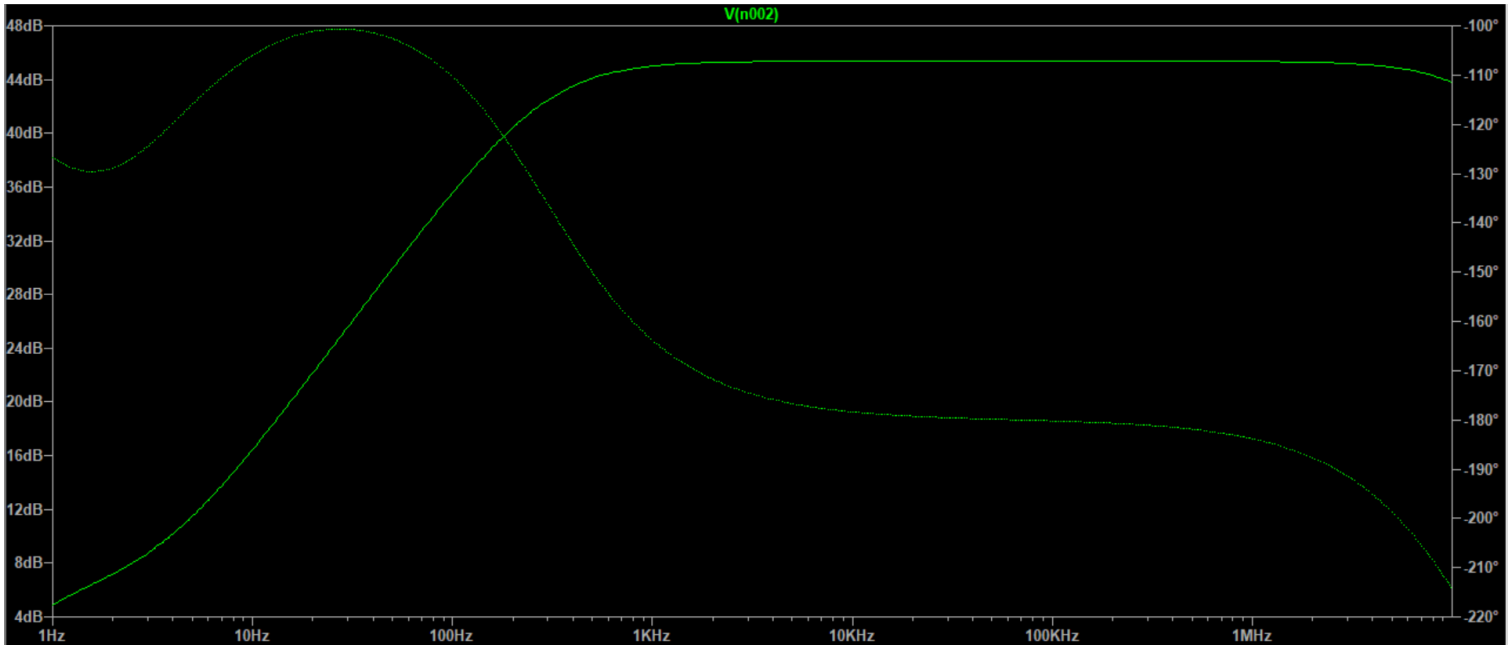
V(n002)
48dB
44dB
40dB
36dB
32dB
28dB
24dB
20dB
16dB
12dB
8dB
4dB
-100°
-110°
-120°
-130°
-140°
-150°
-160°
-170°
-180°
-190°
-200°
-210°
-220°
1Hz
10Hz
100Hz
1KHz
10KHz
100KHz
1MHz

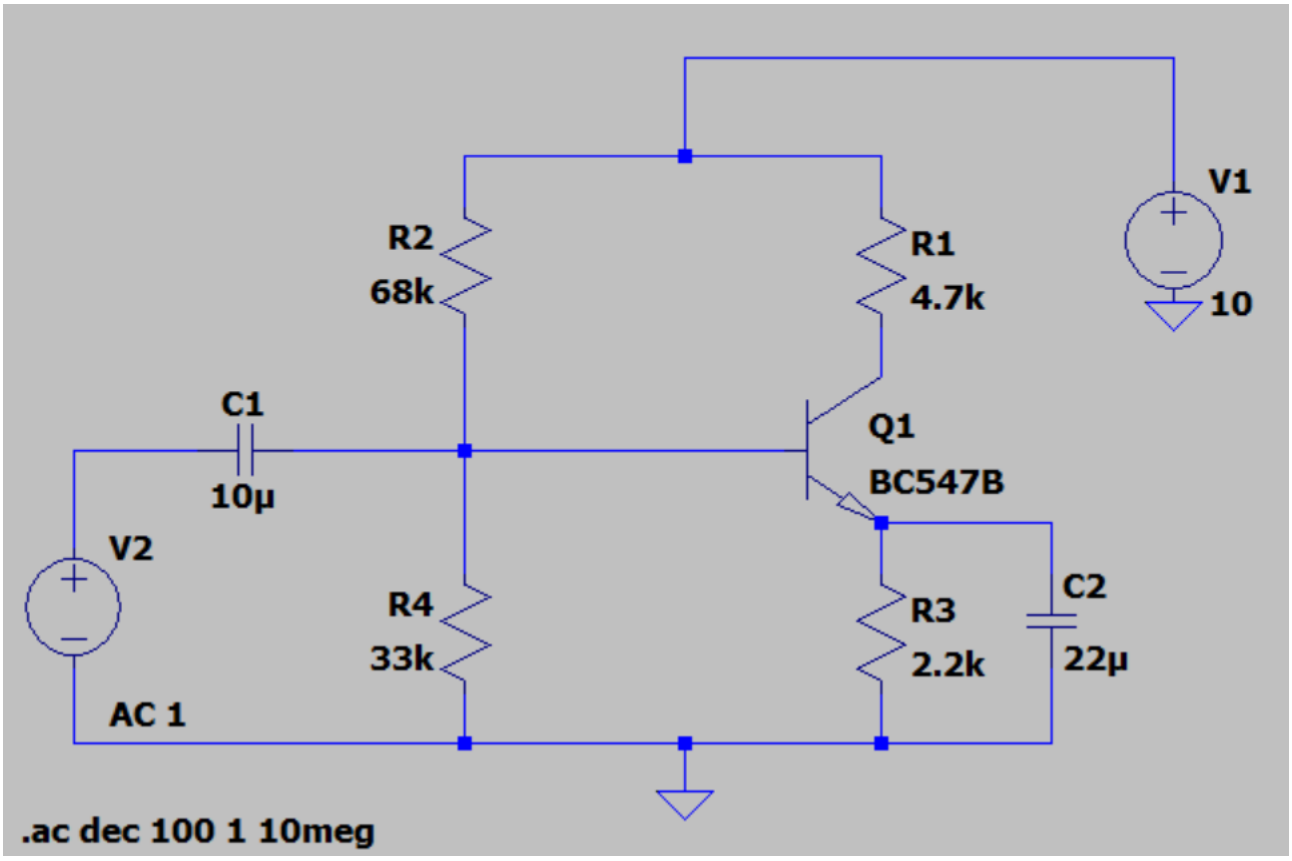
V1
10
R2
68k
R1
4.7k
C1
10µ
Q1
BC547B
V2
AC 1
R4
33k
R3
2.2k
C2
22µ
.ac dec 100 1 10meg

Part- 1: DC Characteristics using Potential Divider Bias

Aim of the Experiment: - Set up a circuit to understand the DC Characteristics

Equipment required: -

- Required resistor values– 68 kΩ ,2.2k Ω , 33k Ω, 4.7 Ω
- Breadboard (×1)
- Constant DC power supply
- BC547 transistor.
- Digital Multimeter to measure Voltage/Resistance.
- Connecting wires

Circuit Diagram: -

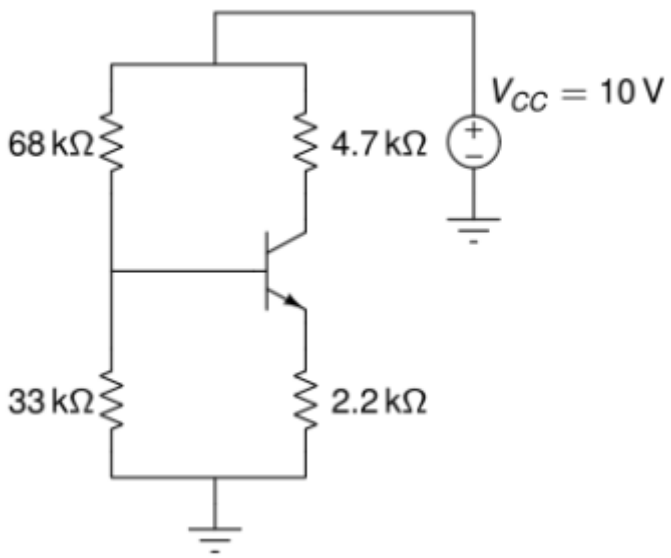

Observatios: -

At V_{CC}=10V

I_C =1.355mA V_{BE} = 0.63V V_{CE} =2.10V

The circuit is in the active region.

Part-2: Common Emitter (CE) Amplifier

Aim of the Experiment: - Measure the transistor voltage gains

Equipments required: -

- Required resistor values– 68 kΩ (×1), 4.7k Ω (×1), 2.2k Ω (×1), 33k Ω (×1)
- Capacitor – 10μF
- Constant DC power supply (5V,12V)
- BJT (BC547)
- Multimeter
- Breadboard (×1)
- Connecting wires

Circuit Diagram: -

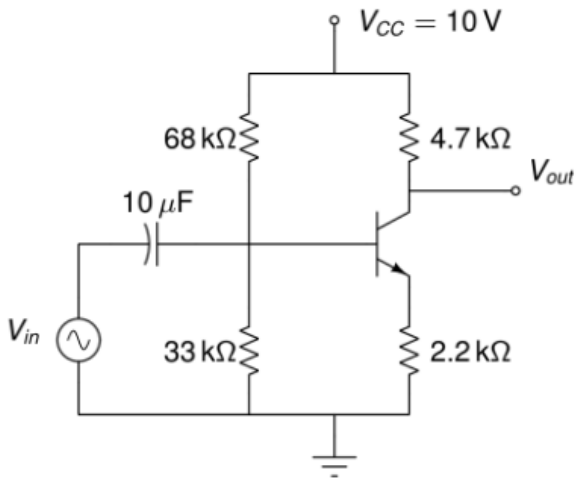

V_{CC} = 10V

Observation Table: -

INPUT V = 1 V_{PP}

Frequency (in Hz)	**Vout** (in V)	Phase Difference (in degrees)	Gain	Gain(dB)
100	2.35	180	2.35	7.421357
250	2.33	180	2.33	7.347118
500	2.33	180	2.33	7.347118
1K	2.31	180	2.31	7.27224
5K	2.30	179	2.30	7.234557
10K	2.25	178	2.25	7.04365
25K	2.23	174	2.23	6.966097
50K	2.19	170	2.19	6.808882
75K	2.17	164	2.17	6.729195
100K	2.09	160	2.09	6.402926
250K	1.61	135	1.61	4.136518
500K	1.07	116	1.07	0.587676
750K	0.8	110	0.8	-1.9382
1M	0.62	105	0.62	-4.15217

OBSERVATION:

At frequency = 1KHz $V_{in} = 1V_{PP}$

V_{out} =2.31V

$A_V = V_{out} / V_{in}$

A_V =-2.31/1= -2.31

-ve symbol denotes the opposite phase in the gain. The 3dB point is between 20kHz and 25kHz.

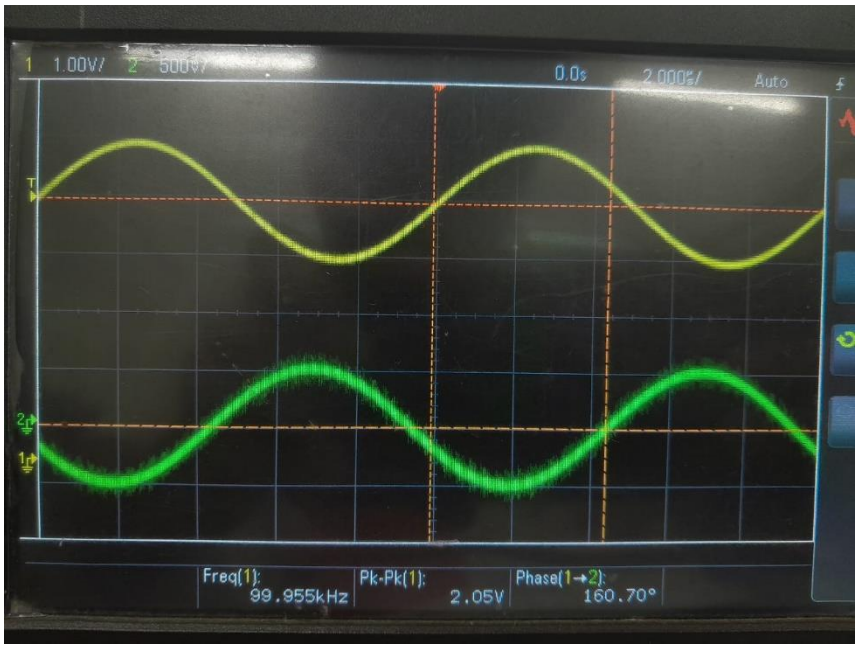

The image of DSO showing Vin and V out

Semilog Graph:

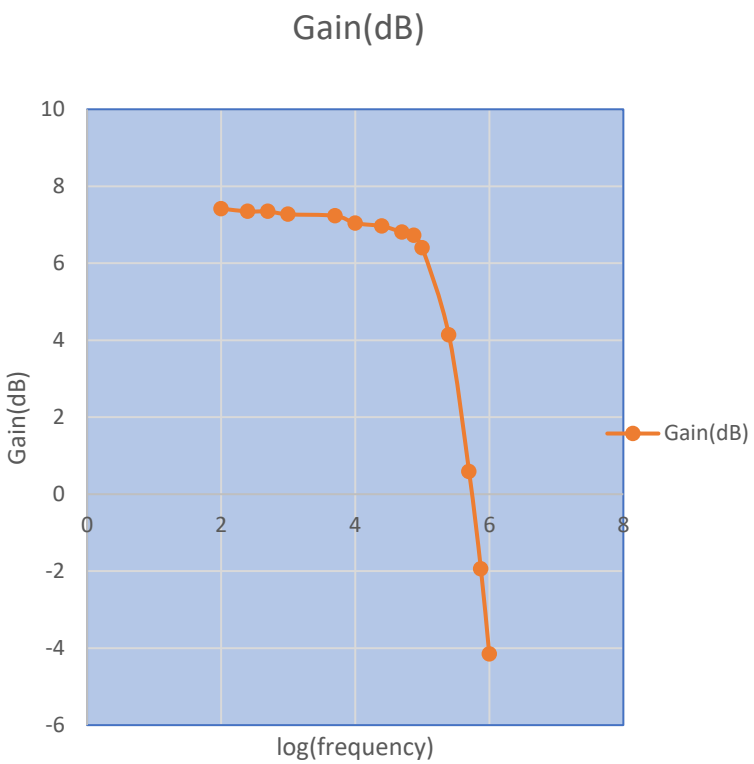

Part- 3: Common Emitter(CE) Amplifier with Emitter Bypass

Aim of the Experiment: - Set up a circuit to understand the behavior of a BJT.

Equipment required: -

- Required resistor values- 4.7 kΩ, 68 kΩ, 33 kΩ, 2.2 kΩ
- Breadboard (×1)
- Constant DC power supply 10V
- Function Generator
- DSO(Digital Storage Oscilloscope)
- BC547 transistor.
- Capacitor- **10uF, 22uF.**
- Digital Multimeter to measure Voltage/Resistance.
- Connecting wires

Circuit Diagram: -

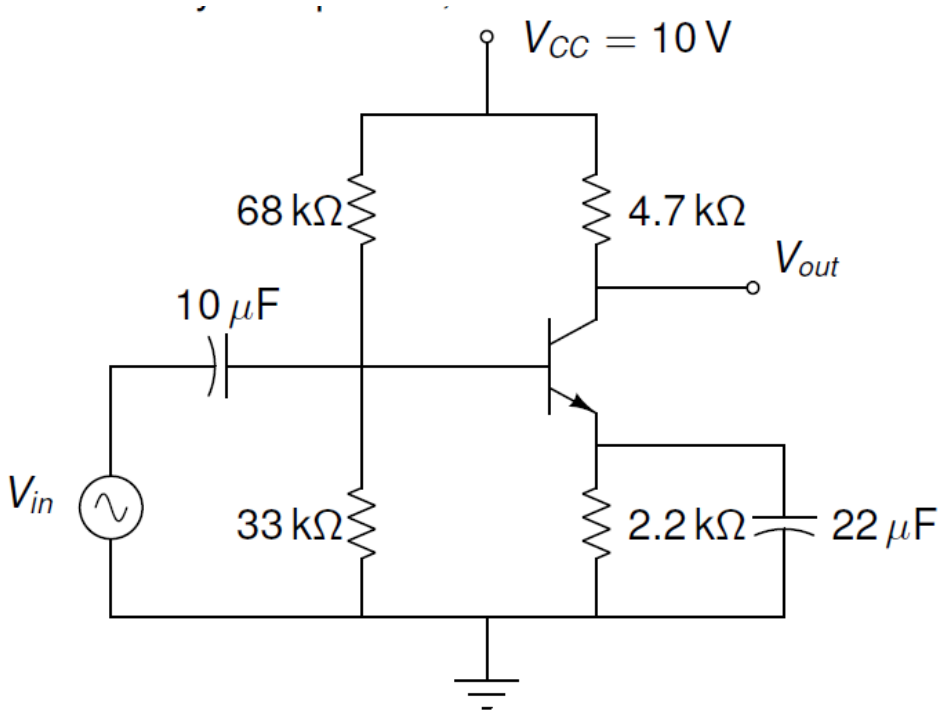

Observation Table:-

Frequency (in Hz)	V_{in} (in Vpp)	V_{out} (in Vpp)	**Gain**	**Gain** (in dB)
10	1	2.5	2.5	7.9588
13	1	3.5	3.5	10.88136
15	1	8.8	8.8	18.88965
20	1	9.2	9.2	19.27576
25	1	9.4	9.4	19.46256
40	1	9.8	9.8	19.82452
50	1	9.8	9.8	19.82452
75	1	10.0	10.0	20
100	1	10.1	10.1	20.08643
250	1	10.1	10.1	20.08643
500	1	10.1	10.1	20.08643
750	1	10.1	10.1	20.08643
1k	1	9.9	9.9	19.9127
2.5k	1	9.9	9.9	19.9127
5k	1	9.8	9.8	19.82452
7.5k	1	9.8	9.8	19.82452
10k	1	9.8	9.8	19.82452
25k	1	9.8	9.8	19.82452
50k	1	9.7	9.7	19.73543
75k	1	9.6	9.6	19.64542
100k	1	9.4	9.4	19.46256
250k	1	8.8	8.8	18.88965
500k	1	7.3	7.3	17.26646
750k	1	6.2	6.2	15.84783
1M	1	5.4	5.4	14.64788
2.5M	1	2.89	2.89	9.217957
5M	1	1.65	1.65	4.349679
7.5M	1	1.25	1.25	1.9382
10M	1	1.05	1.05	0.423786

Graph:-

Plot of Gain(dB) vs Frequency on a semi-log graph

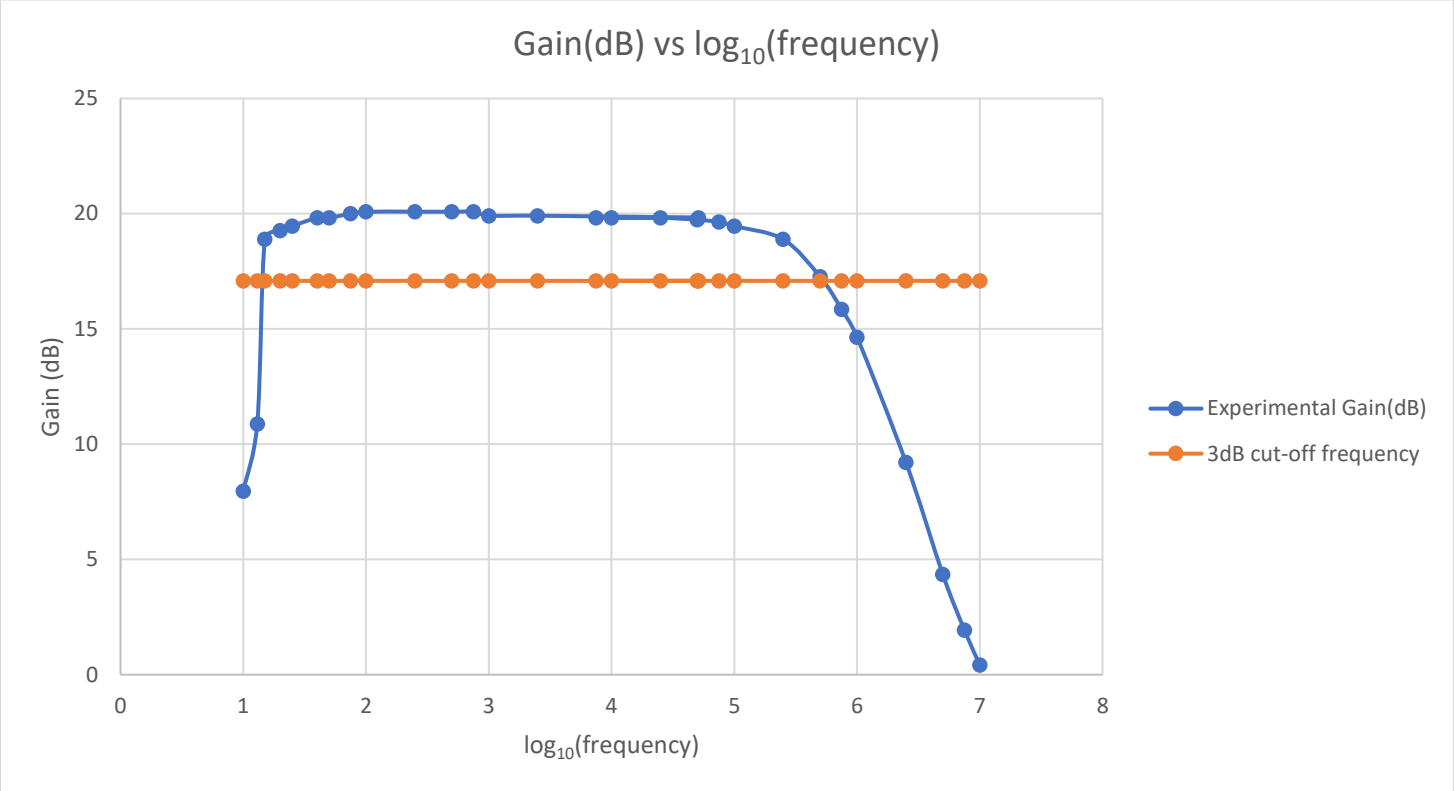

The 3dB cut-off frequencies as observed from the graph and observation table are- **14 Hz** and **500 kHz.**

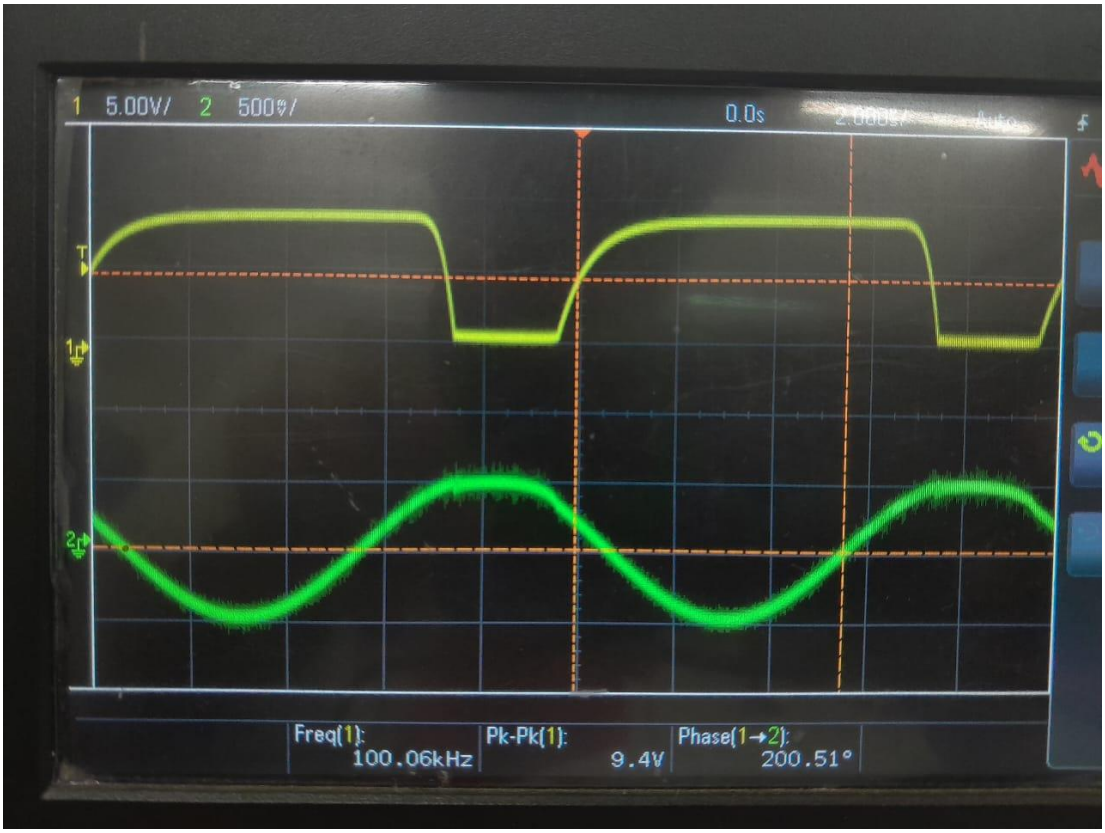

Waveform of V_{in} vs V_{out} at DSO.

Conclusion:-

- From Part-1 of the experiment it was determined that at a certain Voltage the Resistor was in forward-active or saturation region.
- Slight deviations from the waveform at observed in Part-3 due to inability of DSO to measure the waveform properly at extremely low voltages.
- 3dB frequency was found out of CE Amplifier and with a emitter bypass.
- BJT transistors operate by controlling the flow of current between the collector and emitter terminals using the current at the base terminal. When the input signal (Vin) is applied to the base of the transistor, it modulates the base current, which in turn controls the collector current. This makes the common emitter configuration is an inverting amplifier, meaning that when the input voltage increases, the collector current decreases, and vice versa. This inverting action is the primary reason for the phase shift.
- It was observed that the LTSpice simulation and the experimentally calculated values, match in their basic characteristics but have some differences in the numerical values, this might be due to various errors. But in this case, this is most likely due to errors in receiving signal by the DSO, which might have caused errors in values due to lack of precision at low frequency and amplitude.

Discussion:-

- **What is 3dB cut-off frequency?**

  3dB cutoff frequency also known as the half-power frequency, is a point in frequency response of various electronic and electrical systems. It represents the frequency at which the signal's power or amplitude is reduced to half of its maximum value, indicating a signification drop in signal strength.
  Half the power, represents $\frac{1}{\sqrt{2}}$ times gain. Using the equation for gain.
  $\text{Gain(dB)} = 20\log\left(\frac{1}{\sqrt{2}}\right) \approx 3\text{dB}$.
  Hence, from here we get the term 3dB.
  The gain at this frequency is 3dB lower than max. gain.

- **Why a phase difference is observed between V_{in} and V_{out} of the common-emitter amplifier?**

  A phase difference of nearly 180° or inversion in phase is observed. This is because when the input signal is positive, it drives the base-emitter junction into forward bias, allowing significant current to flow. Conversely, when the input signal is negative, the base-emitter junction becomes reverse-biased, reducing the collector current.

- **"A common emitter amplifier cannot amplify voltage as such, but it can amplify only a change in voltage". Give your views for and against this statement.**

Supporting the statement:

Common-emitter amplifiers are typically designed to amplify small-signal variations around a quiescent(DC) operating point. They are inherently AC-coupled devices, meaning to amplify change in voltage and not DC Voltage.

Against the statement:

Common-emitter have a voltage gain meaning that they do provide amplification of the input voltage, including DC Component. The voltage gain, denoted as A_v quantifies how much the input voltage is amplified to produce the output voltage. While the primary focus is on AC signal amplification, the amplifier does affect both the AC and DC compoents of the input voltage.

Hence, the statement are partially correct from both ends.